Worm and Multi-Spur Reduction Gear Units

Variable Speed – D.C. Permanent Magnet

Enclosures: – PM 1 – PM 2 – PM 6 – Drip Proof Internal Fan Cooled (IP 21)
PM 10 – PM 11 – PM 3 – PM 4 – PM 5 – Totally Enclosed (IP 54)

Gearbox Type:

LWS

Speed Range: 0.45 – 80 r.p.m.

Gearbox Specification *Motor Speed 4000 r.p.m.*			PM 10 LWS		PM 11 LWS		PM 1 LWS	PM 3 LWS	PM 2 LWS	PM 4 LWS	PM 6 LWS	PM 5 LWS
			Cont Motor Rating 60 w	1 Hour Motor Rating 75 w	Cont Motor Rating 90 w	1 Hour Motor Rating 110 w	Cont Motor Rating 120 w	1 Hour Motor Rating 120 w	Cont Motor Rating 160 w	1 Hour Motor Rating 160 w	Cont Motor Rating 200 w	1 Hour Motor Rating 200 w
FINAL R.P.M.	RATIO WORM	RATIO SPUR	OUTPUT TORQUE (Nm)									
1.2	30:1	115:1	100	100	100	100	100	100	100	100	100	100
2	16 1/2:1	115:1	100	100	100	100	100	100	100	100	100	100
4	8 1/3:1	115:1	78	97	100	100	100	100	100	100	100	100
4.8	7 1/4:1	115:1	69	86	100	100	100	100	100	100	100	100
5.7	12 1/2:1	56:1	56	70	84	100	100	100	100	100	100	100
7	10 1/3:1	56:1	47	59	71	87	95	95	100	100	100	100
7.6	9 1/3:1	56:1	43	53	64	78	85	85	100	100	100	100
8.6	8 1/3:1	56:1	40	50	60	74	80	80	100	100	100	100
9.8	7 1/4:1	56:1	36	45	54	66	72	72	96	96	100	100
11.4	6 1/4:1	56:1	33	41	49	59	65	65	87	87	100	100
12	13 1/2:1	25:1	26	33	40	49	53	53	62	62	62	62
13	12 1/2:1	25:1	25	31	37	46	50	50	62	62	62	62
15.5	10 1/3:1	25:1	21	26	32	40	42	42	56	56	62	62
17	9 1/3:1	25:1	19	24	28	35	38	38	51	51	62	62
19	8 1/3:1	25:1	18	22	27	33	36	36	48	48	60	60
25.5	6 1/4:1	25:1	14	18	22	27	29	29	39	39	48	48
40	16 1/2:1	6:1	7	9	11	13	15	15	20	20	24	24
49	13 1/2:1	6:1	6	8	9	12	13	13	17	17	21	21
60	11 1/3:1	6:1	5	7	8	10	11	11	14	14	18	18
70	9 1/3:1	6:1	4	6	7	8	9	9	12	12	15	15
80	8 1/3:1	6:1	4	5	6	8	8	9	11	11	14	14

PM 10 LWS
PM 11 LWS

Dimensions in mm. Scale 1:4

NB: Unit drawn is PM 10 LWS

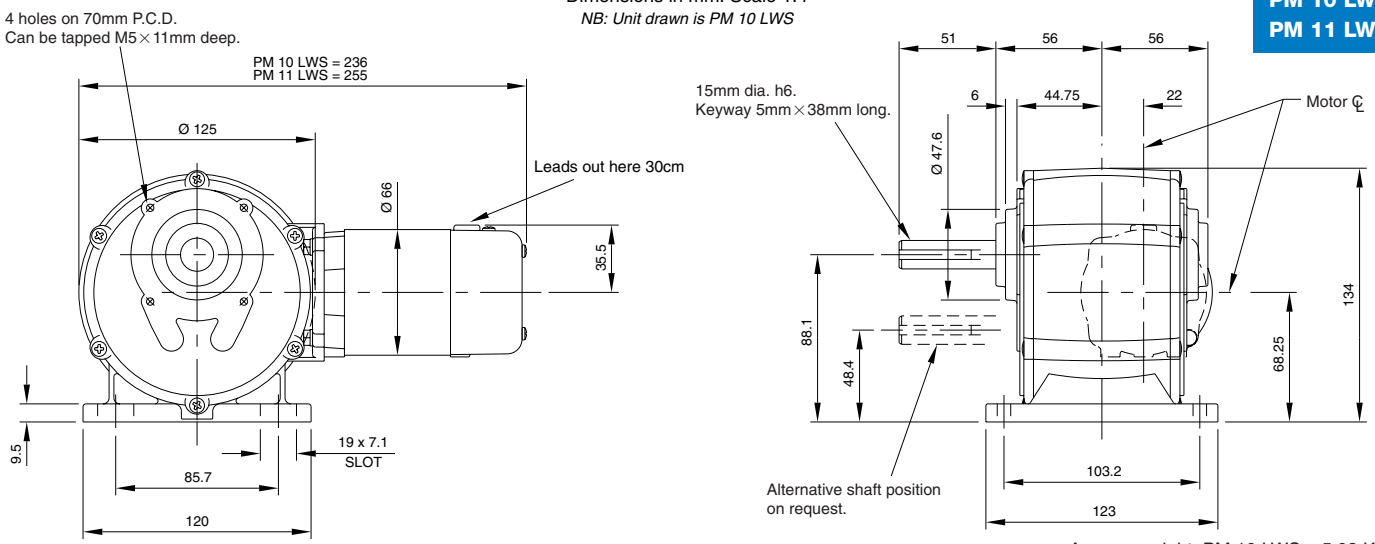

Optional shaft at motor speed (lead end only) 7.93mm dia. × 33mm long.

Approx. weight: PM 10 LWS – 5.03 Kg
PM 11 LWS – 5.49 Kg

PM 1 LWS – PM 2 LWS – PM 3 LWS
PM 4 LWS – PM 5 LWS – PM 6 LWS

Dimensions in mm. Scale 1:4

NB: Unit drawn is PM 1/4 LWS

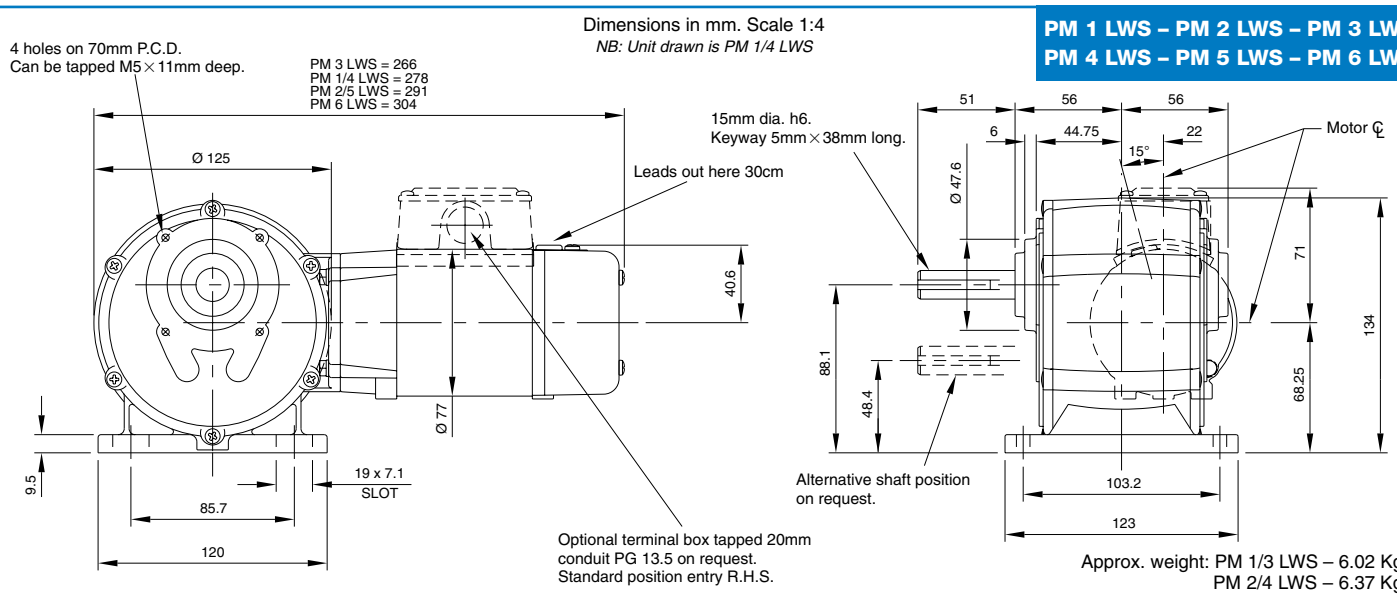

Optional shaft at motor speed (lead end only) 10mm dia. × 33mm long.

Approx. weight: PM 1/3 LWS – 6.02 Kg
PM 2/4 LWS – 6.37 Kg
PM 5/6 LWS – 6.56 Kg