NAPETOST / VOLTAGE	230 V
FREKVENCA / FREQUENCY	50 Hz
NAZIVNA MOČ / NOMINAL POWER	750 W
MAKSIMALNA MOČ / MAXIMAL POWER	750 W

Verzija A.17 | Status V delu

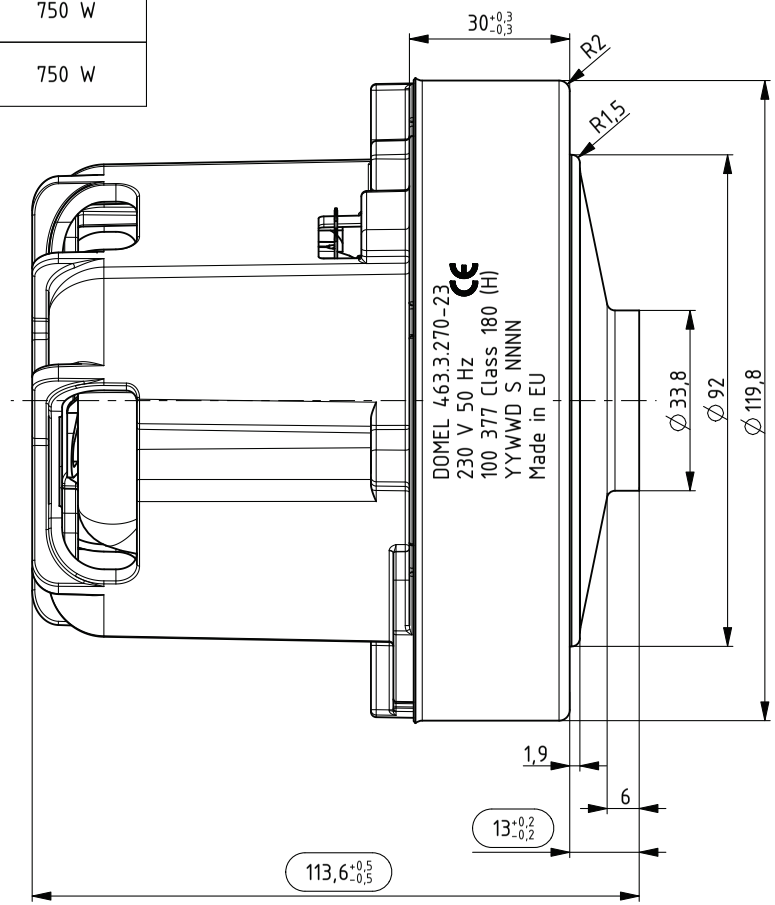

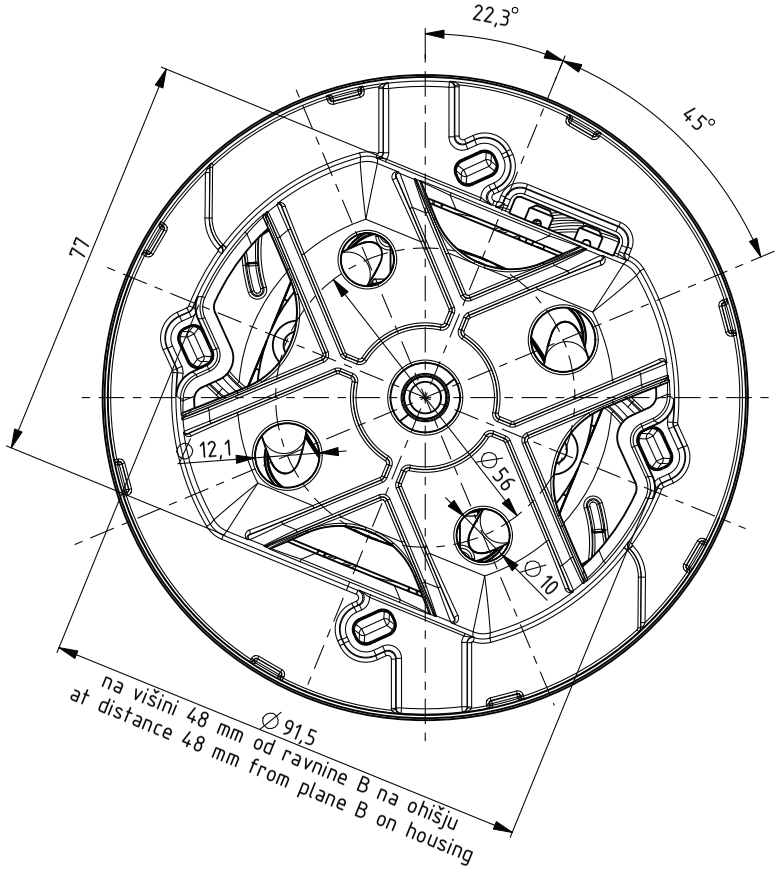

( ), * - pomembna mera
important dimension

OSNOVNE ZNAČILNOSTI		TYPICAL CHARACTERISTICS	
IZVEDBA	ENOSTOPENJSKA	FAN SYSTEM	SINGLE STAGE
ULEŽAJENJE	DVA KROGLIČNA LEŽAJA	BEARINGS	DUAL BALL
VRSTA PRETOKA	SKOZI MOTOR	DISCHARGE	THRU FLOW
SMER VRTENJA	DESNA	DIRECTION OF ROTATION	CW

Ozn. Mark	Št. obvestila Nr. of notice	Datum Date	Ime Name
A0	11382	30.06.14	D. Vrhunc

Tolerance odprtih mer / Tolerances without individual indications: ISO 8015, ISO 2768 - mK

Površinska hrapavost / Surface finishing

	Datum/Date	Ime/Name
Izdelal / Designed	16.10.13	D. Vrhunc
Pregl. / Verified	30.06.14	J. Rihtaršič

DOMEL®
Otoki 21, 4228 Železniki, Slovenija

Merilo / Scale: 1:1

Original format: ISO 5457 - A3

Gradivo / Material:

Naziv / Title: SESALNA ENOTA

Koda / Code: 463.3.270-23

List / Sheet: 3+

Stran / Page: 1

4633270023_SESALNA_ENOTA

Izdelano s CAD/ProEngineer - ročno spreminjanje ni dovoljeno! Vsak prenos tretjim osebam ali uporaba v nedogovorjene namene ni dovoljena po zakonu o avtorskih pravicah.
Made with CAD/ProEngineer - changing is not allowed! Any unauthorized copying of this drawing or unauthorized distribution of the information contained herein is prohibited.