THIS DRAWING IS THE PROPERTY OF TWIFLEX LTD. IT MUST NOT BE LENT COPIED OR DISCLOSED WHOLLY OR IN PART TO ANY PERSON WITHOUT WRITTEN AUTHORITY FROM TWIFLEX LTD. DESIGN RIGHT SUBSISTS IN THE DESIGN OF ARTICLES MANUFACTURED WHOLLY OR IN PART IN ACCORDANCE WITH THIS DRAWING

BREAK ALL SHARP EDGES 0.75mm (0.030") X 45°

ALL DIMENSIONS IN mm UNLESS OTHERWISE STATED

THIRD ANGLE PROJECTION
DIMENSIONS AND TOLERANCES TO BS 8888

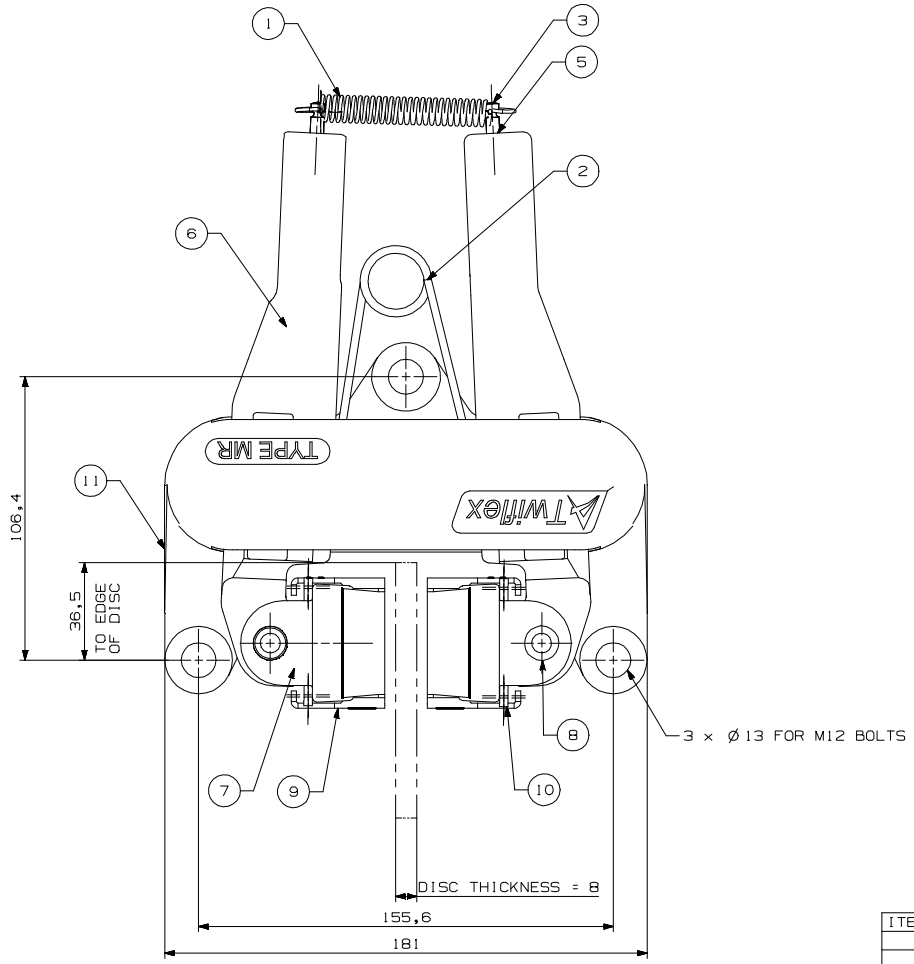

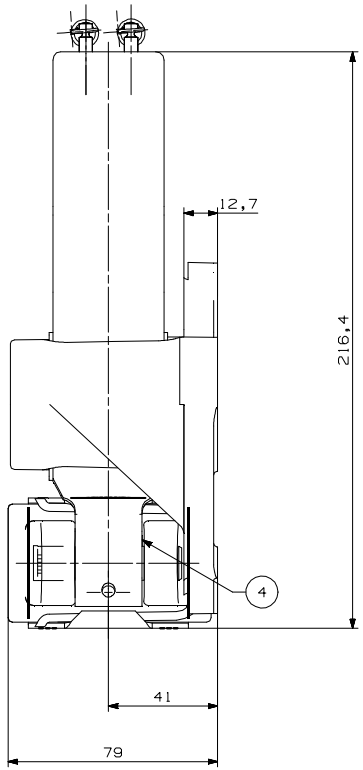

ITEM NO.	QTY	DESCRIPTION	PART No.
1	2	SPR TENSION MR	2400035
2	1	SPR TORSION MR	2500020
3	4	PIN GROOVED 5 X20 MR MX MU	3100088
4	2	PIN LIGHT 6 DIA x 16	3800149
5	1	SHOE ARM SLOTTED SIDE	6630079
6	1	SHOE ARM THRUSTER SIDE	6630080
7	2	SHOE MR	6640053

ITEM NO.	QTY	DESCRIPTION	PART No.
8	2	TUBE PIVOT MR	6700412
9	2	MR/MS BRAKE PAD ASSEMBLY	7000386-Z
10	2	SPR PAD RETAINING MR/MS/MW	7900024
11	1	BASE PIVOT MR	8030010

ISSUE	DESCRIPTION	DRAWN	CHECK	DATE
01	FIRST ISSUE F0217	DR	RH	04/07/13

Altra Global HDCB Group
Wichita Clutch
Twiflex
Industrial Clutch

TWIFLEX LIMITED
AMPTHILL ROAD
BEDFORD
MK42 9RD
TEL: +44 (0)1234 350311
FAX: +44 (0)1234 350317
www.wichita.co.uk
clutch@wichita.co.uk

OPEN ANGLE TOLERANCES: ± 0.5°
OPEN TOLERANCES: ± 0.25 mm
GENERAL M/C FINISH: 1.6 RA µm
SURFACE FINISH IN MICRONS
EG: ✓ = 2 MICRONS (0.002mm CLA)
(80 MICRO-INCHES CLA)

DESCRIPTION: MR BRAKE ASSEMBLY FOR 8mm DISC

MATERIAL: –

FINISH: –

DRAWN: DR
DATE: 05/06/14
CHECKED: RH
DATE: 05/06/14
SCALE: 1 : 1

INERTIA: --- kgm²
WEIGHT: 9 kg
PART No: 6702235
SHEET 1 OF 1
DRAWING No: 6702235
SHEET 1 OF 1